OPERATING MODE : NO(NORMALLY OPEN)
REPEATABILITY : 0.003mm
(OPERATING SPEED 50~200mm/min)
RATING : DC24V
(Max.10mA) STATIONARY CURRENT
(Max.20mA) INRUSH CURRENT
BEARING STRUCTURE: METAL BEARING
(FOR STRAIGHT TOUCH OR WITHIN DEFLECTION ANGLE ±3°)
CONTACT MATERIAL : SUS HRC45
CASE MATERIAL : SUS303
PRETRAVEL : 0.3mm
STROKE : 1.5mm
CONTACT FORCE : 0.5N

DEGREE OF PROTECTION: IEC IP40

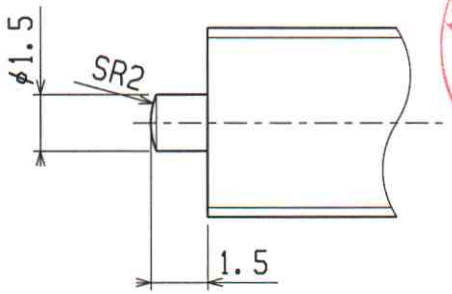

DETAIL OF CONTACT POINT
SCALED:5/1

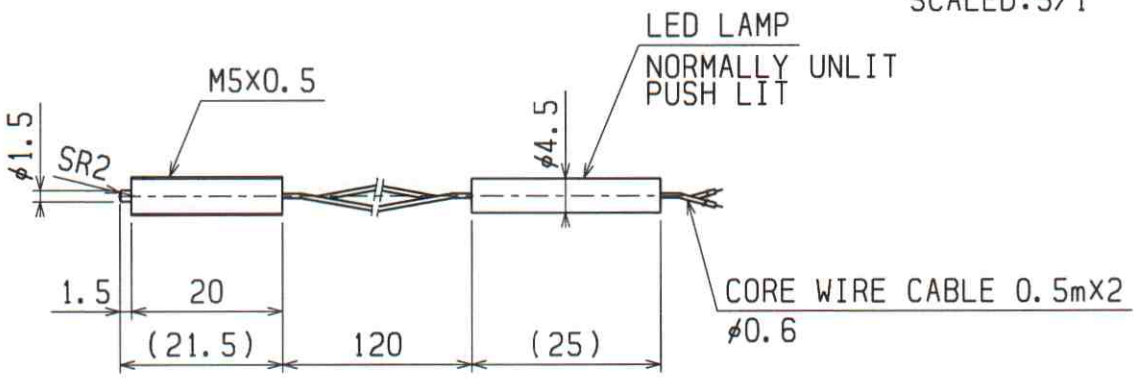

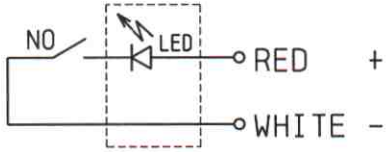

ACCESSORY
・HEXAGONAL NUT S629 2EA
M5x0.5(e:7.7/s:7/m:2.4)

			NAME	PT-TOUCH SWITCH
CHK	DRA	A4	DRAWING NUMBER	PT5M3WA-L
Kanno	15.04.30 SUSAKI	1 : 1	METROL LTD.	METROL

PT5M3WA-L英.CSD